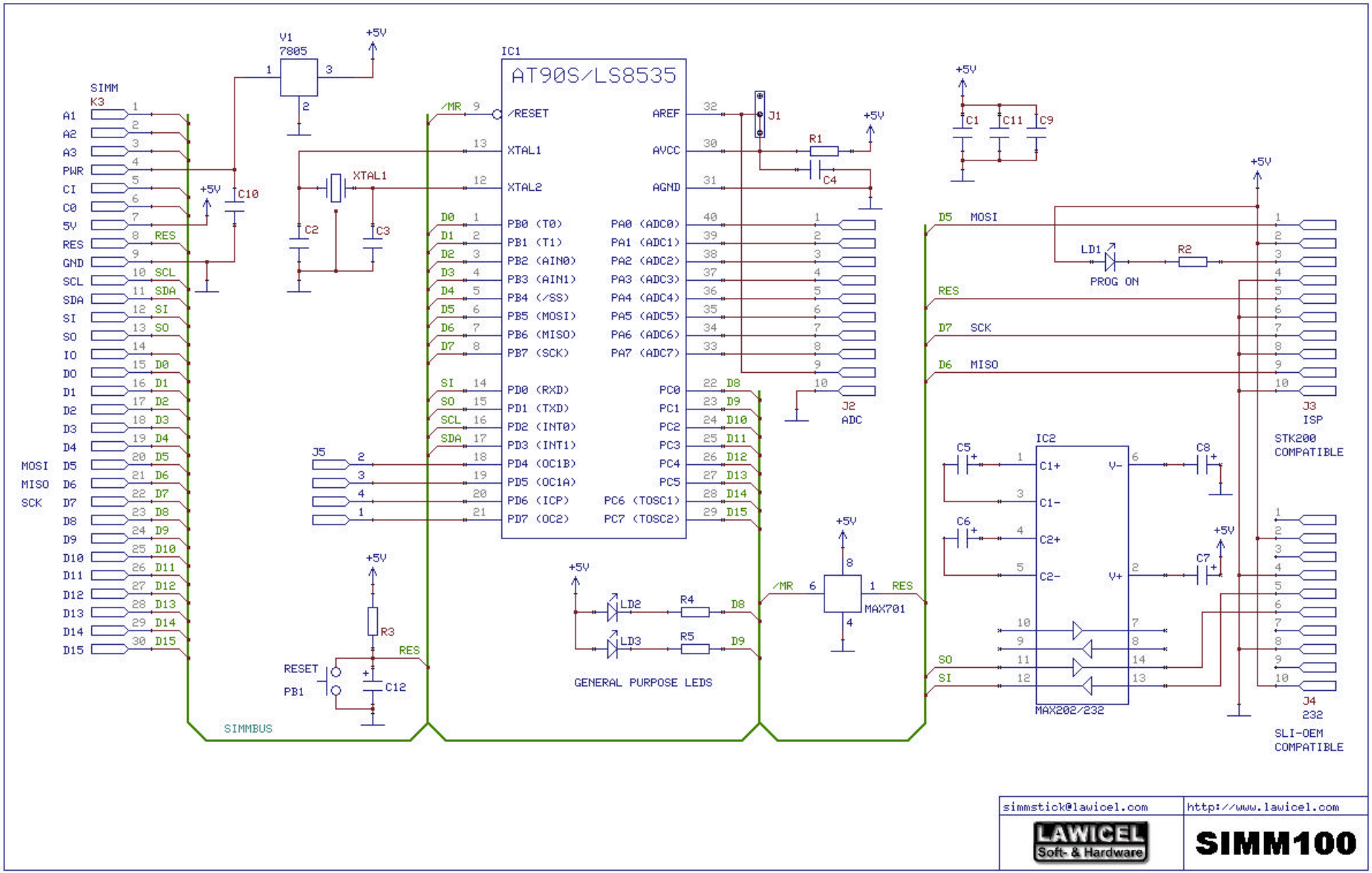
SIMM
K3
A1
A2
A3
PWR
CI
C0
5V
RES
GND
SCL
SDA
SI
SO
IO
D0
D1
D2
D3
D4
D5
D6
D7
D8
D9
D10
D11
D12
D13
D14
D15
MOSI
MISO
SCK
SIMMBUS
V1
7805
+5V
C10
XTAL1
C2
C3
IC1
AT90S/LS8535
/MR
/RESET
XTAL1
XTAL2
PB0 (T0)
PB1 (T1)
PB2 (AIN0)
PB3 (AIN1)
PB4 (/SS)
PB5 (MOSI)
PB6 (MISO)
PB7 (SCK)
PD0 (RXD)
PD1 (TXD)
PD2 (INT0)
PD3 (INT1)
PD4 (OC1B)
PD5 (OC1A)
PD6 (ICP)
PD7 (OC2)
AREF
AVCC
AGND
PA0 (ADC0)
PA1 (ADC1)
PA2 (ADC2)
PA3 (ADC3)
PA4 (ADC4)
PA5 (ADC5)
PA6 (ADC6)
PA7 (ADC7)
PC0
PC1
PC2
PC3
PC4
PC5
PC6 (TOSC1)
PC7 (TOSC2)
J1
R1
C4
J2
ADC
J5
R3
RESET
PB1
C12
LD2
LD3
R4
R5
GENERAL PURPOSE LEDS
MAX701
C1
C11
C9
LD1
PROG ON
R2
J3
ISP
STK200
COMPATIBLE
IC2
C1+
C1-
C2+
C2-
V-
V+
C5
C6
C7
C8
MAX202/232
J4
232
SLI-OEM
COMPATIBLE
simmstick@lawicel.com
http://www.lawicel.com
LAWICEL
Soft- & Hardware
SIMM100